SYNCHRONIZING THE THROTTLE BODIES

Amended on 27 Jun 2016;
Since I have had a few inquiries from owners in Europe about doing the Throttle Body Sync and not being able to get into the DIAG mode because they either installed a "Race ECU" or had their ECUs, reflashed by Tim, here is what needs to be done, in order to get those modified bikes into "Diagnostics - DIAG" mode and get rid of the constant ER-4 error code on their Tank Top Meter.

What you need to do is pull off the RIGHT SCOOP and find the 6-pin connector (wire colors are R/Y, Lg, R/W, B, Y/G and B/W) and disconnect that connector...

For now, leave the scoop off...

Now, if you hold down the RESET and SELECT buttons as you turn the Ignition Key ON, you will not get the ER-4 error and you will be able to go into "DIAG" mode...

If that works, then take a plastic bag (like a zip lock bag) put it over both side of the disconnected 6-pin connectors and tape it around the bag(s) to protect any water or dirt from entering the connectors...put your scoop back on...

So, once you can get into the DIAG mode, go to "DIAG" mode.

Go to DIAG Code Nos. D:01, D:13, D:14 and D:15

Verify that the display reading is between 15 to 16 (Throttle Grip Fully CLOSED)

Verify that the display reading is between 97 to 102 (Throttle Grip Fully OPEN)

If all of them are within specs…then you can go to the Throttle Body Synchronization process…

If not, you need to adjust your "Throttle Position" and "Accelerator Position" Sensors…

If you look at Cylinder #2 (Left Front), near the adjustment screw that is painted White, which is the "Throttle Position Sensor"...(Refer to first picture on Page-7 below)…

Just to the left of the Cylinder #2 Throttle Body Synchronization Adjustment Screw, you can see a Black Module labeled "9014E" with a Silver colored screw that also has white paint on it...it is a "Security Hex Head" screw...it has a "Pin" in the middle unlike common Hex Head Screws...

The "Accelerator Position Sensor" is located on the Right Front side of the Throttle Body...

Refer to picture below...

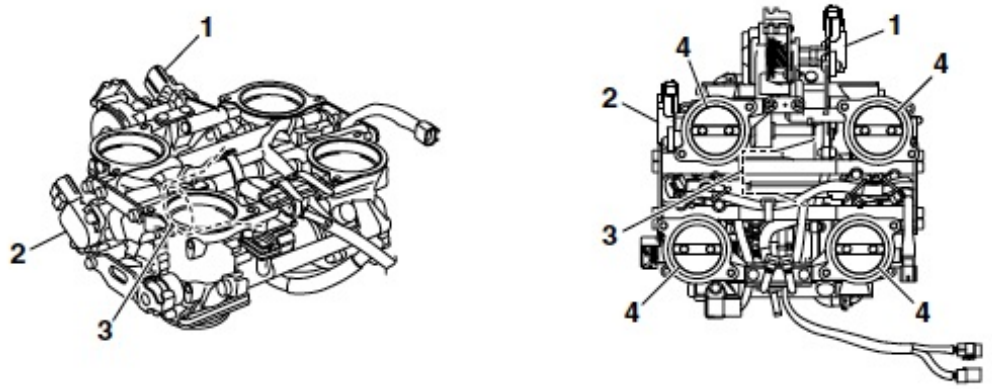

1. Accelerator position sensor
2. Throttle position sensor
3. Throttle servo motor
4. Throttle valves

Once you have both sensors adjusted to spec, as verified using DIAG Code Nos. D:01, D:13, D:14 and D:15, you can then continue on and do the Throttle Body Synchronization process…

Make sure that you take come "White" paint and dab some onto the sensor security screws, to indicate that it was "set"…

Amended on 03 Dec 2012;
First, I wanted to point a word of caution concerning the "White" painted "Cylinder Throttle Body Adjustment Screw" head that you will be adjusting further in this procedure.

When I did my first 2009 GEN2, there were no issues and only one adjustment screw head was painted white, indicating that it was the "Standard" Cylinder Throttle Body Adjustment Screw.

Not until early last year (2011) did I notice that two screws were painted white.

I called Yamaha (Cypress, CA) Headquarters USA and of course, some idiot rep, told me that I HAD to take it to an authorized Yamaha dealership and that ONLY they could do such important tasks. She heard the "CLICK" and "SLAM" of the phone receiver. I then went to my dealership and asked the mechanics there about it and they said that they had never seen this issue before. So they too called Cypress and basically were told to "forget about it!!!"…another words, no proper response…

So, here we are…I had that 2009 last year along with my current 2010 which I did at the same time and it too had, although different cylinders, two screws painted white.

After talking this over with the certified Yamaha engine mechanic at my dealership, we agreed that if Cylinder #2 (Left Front) had its screw painted white, no matter if all the other three also were painted white, to use Cylinder #2 as the "Standard" cylinder, where the adjustment screw is never touched.

I personally believe that it makes no difference and as long as you get all four cylinders synchronized to the same level on the gauges and you are able to adjust your throttle to the correct setting…who cares…

I just wanted to bring this to your attention before starting this procedure.

Before synchronizing the throttle bodies, the following items should be checked to see that there are no problems there, before assuming that your problem is the Throttle Body Sync:
• Valve clearance
• Spark plugs
• Air filter element
• Throttle body joints
• Fuel hoses
• Air induction system
• Exhaust system
• Canister purge hoses (for California only)
• Breather hoses

Pre-Check:

Start the engine, let it warm sufficiently. First, check to see if the engine's idle RPM is steady or not. If its not, proceed to Step-1 below. If it is, rev the engine to 3-4K RPM and as the RPMs are coming down towards idle, you should not see any skips, bumps, blips, etc. in the RPM and it should decrease smoothly down to idle. When the RPM goes slightly below the normal idle RPM and then rises slightly back to idle is NOT an indication that it is incorrect. However, it is the BEST when the RPMs decrease and stop at idle without any dip below idle. If the decreasing RPMs are erratic in any way, proceed to Step-1 below.

This procedure was built around the use of a "Motion Pro" Model 08-0411 SyncPro Carb Tuner. But basically it can be adapted for use with most 4 Tube Sync Tuners.

Stand the vehicle on a level surface and on a compatible rear paddock lifter or suitable stand. Use of a front Chock Block is also recommended.

Step-1:

First, in order to end up with accurate readings, the tuner must be calibrated prior to each and every use of the unit.

Using the 6-way "white plastic" adapter with the short "black" rubber hose on one port and a "dead" plug on one port, connect the four tubes from the top of the tuner to the remaining four ports on the adapter.

Remove the "dead" vacuum cap from the throttle body on the cylinder that is to be the "standard" (normally that cylinder's synchronization adjustment screw will have "white" paint on it. However, it was found on a 2009 model that was tested, Cylinder #2 (Left Front) had the white paint on the screw and the other three did not. But when testing a 2010 at the same time, it was found that both Cylinders #3 (Right Rear) and #4 (Right Front) had "white" paint on the screws and the opposite side (Left) screws for Cylinders #1 (Left Rear) and #2 (Left Front) did not. This is a mistake by the Yamaha Factory and in all cases, one of the front cylinders should be used as the standard, which ever one has the "white" paint on the screw. If all else fails, use cylinder #2 (Left Front) as your standard cylinder.

Connect the short piece of black rubber hose from the calibration adapter on to the Standard cylinder throttle body vacuum tube where you removed the "dead" vacuum cap.

Make sure that all four calibration screws on the tuner are turned fully counterclockwise (CCW) so that it takes maximum vacuum to suck the fluid up from the tuner.

Now, start up your engine in neutral and do not give it any gas when doing so. After the engine has warmed up sufficiently, adjust the calibration screws on the tuner slowly, one at a time, until all four vacuum tube fluid levels set to the same level. Adjust each the levels on all four are at the same level.

Once you have that, turn the engine OFF and disconnect, the short black hose from the standard cylinder, remove the four hoses from the tuner from the white plastic adapter and store the adapter in its place on the tuner and proceed to Step-2.

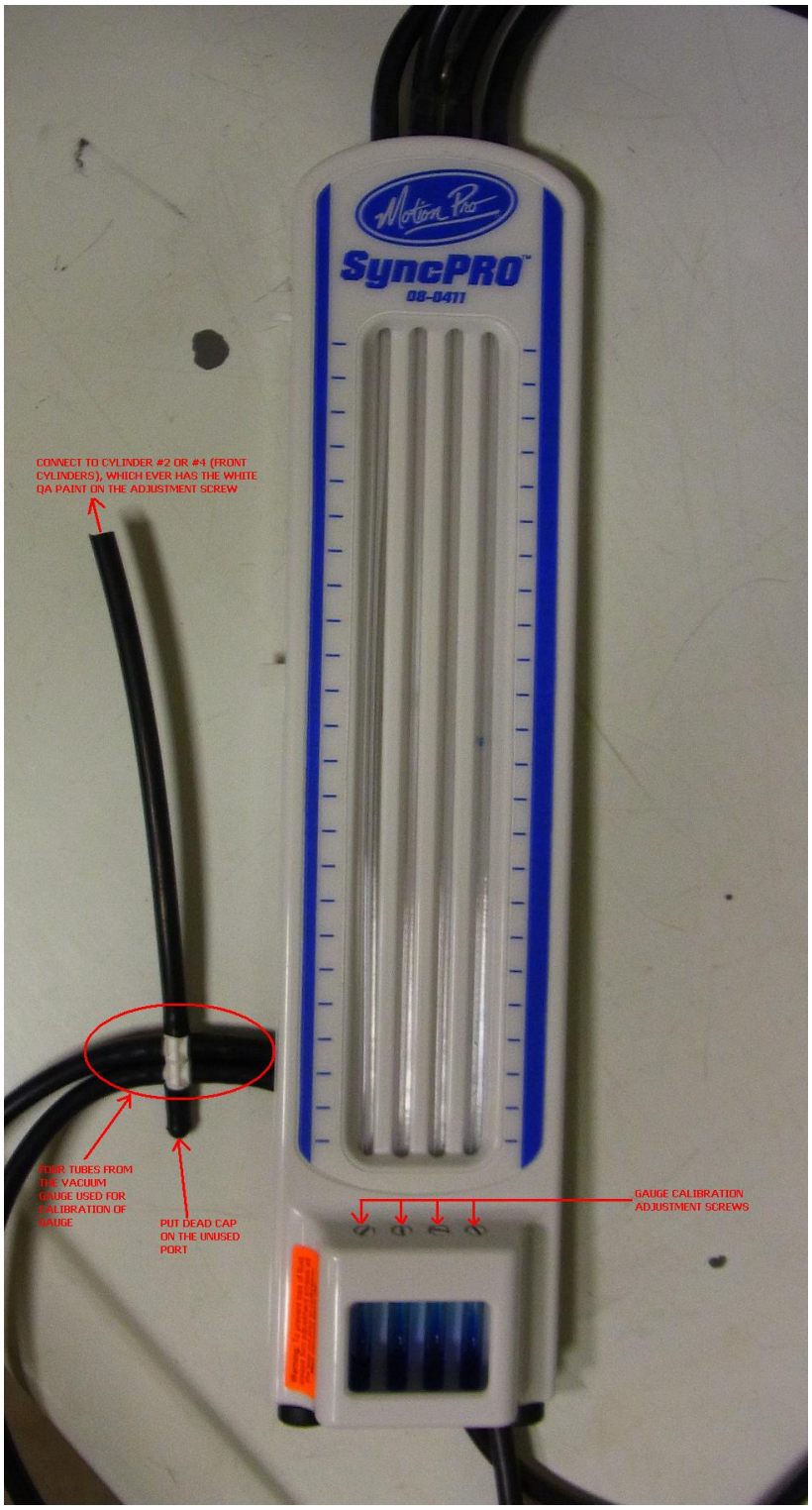

Step-2:

Remove Vacuum Caps for the other three Cylinders besides the Standard Cylinder. Connect the four black vacuum hoses on the tuner to the respective cylinder throttle body vacuum tube.

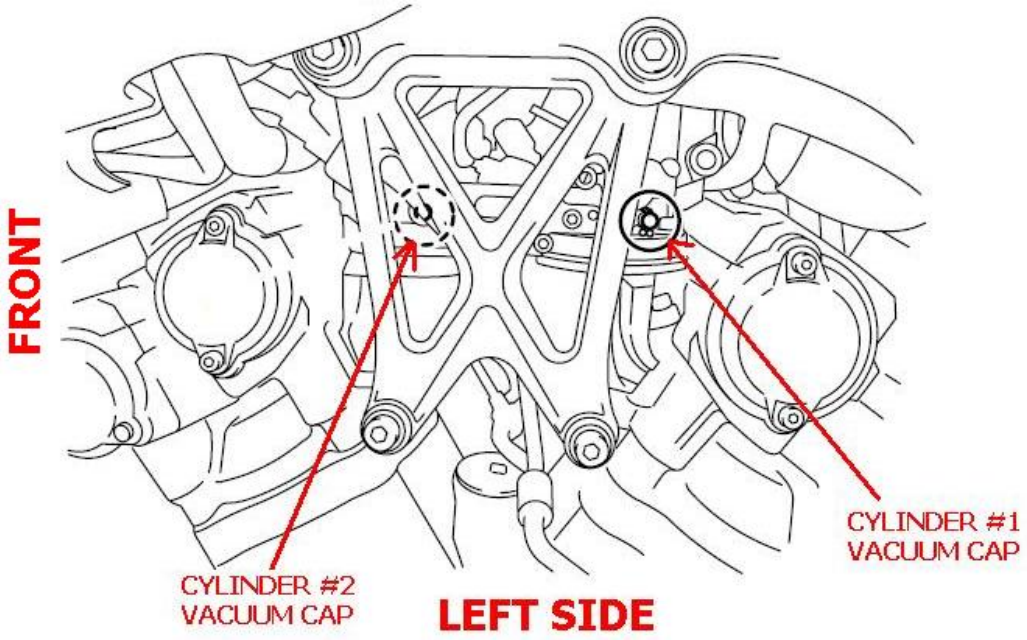

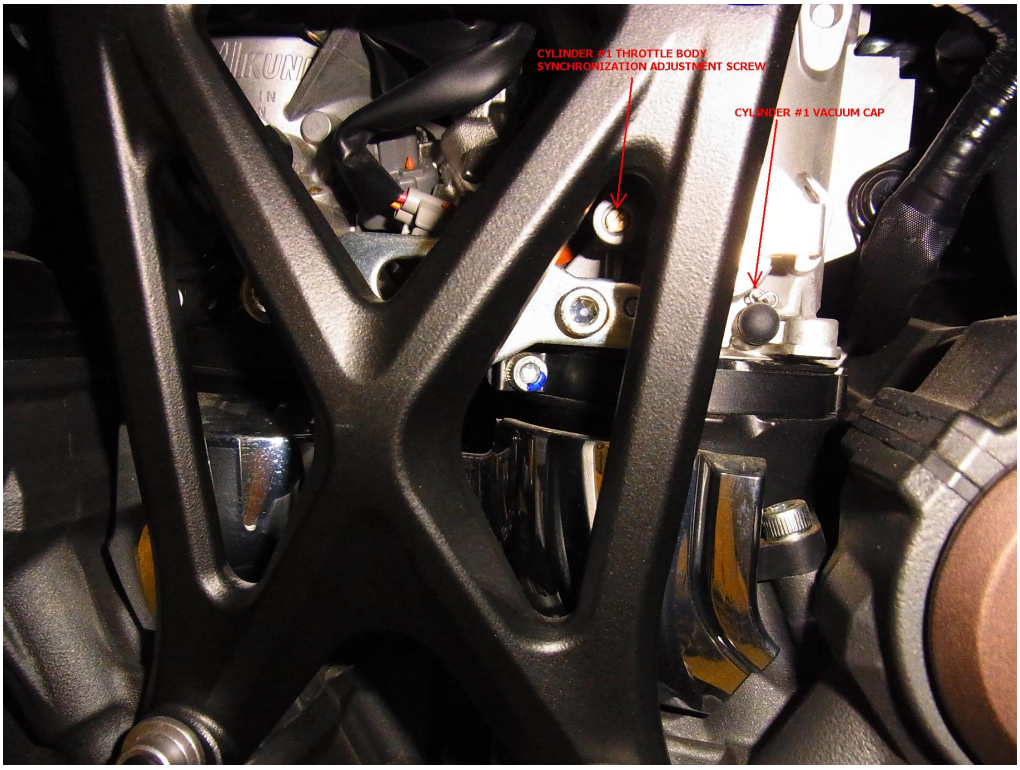

CYLINDER #1 (LEFT REAR)

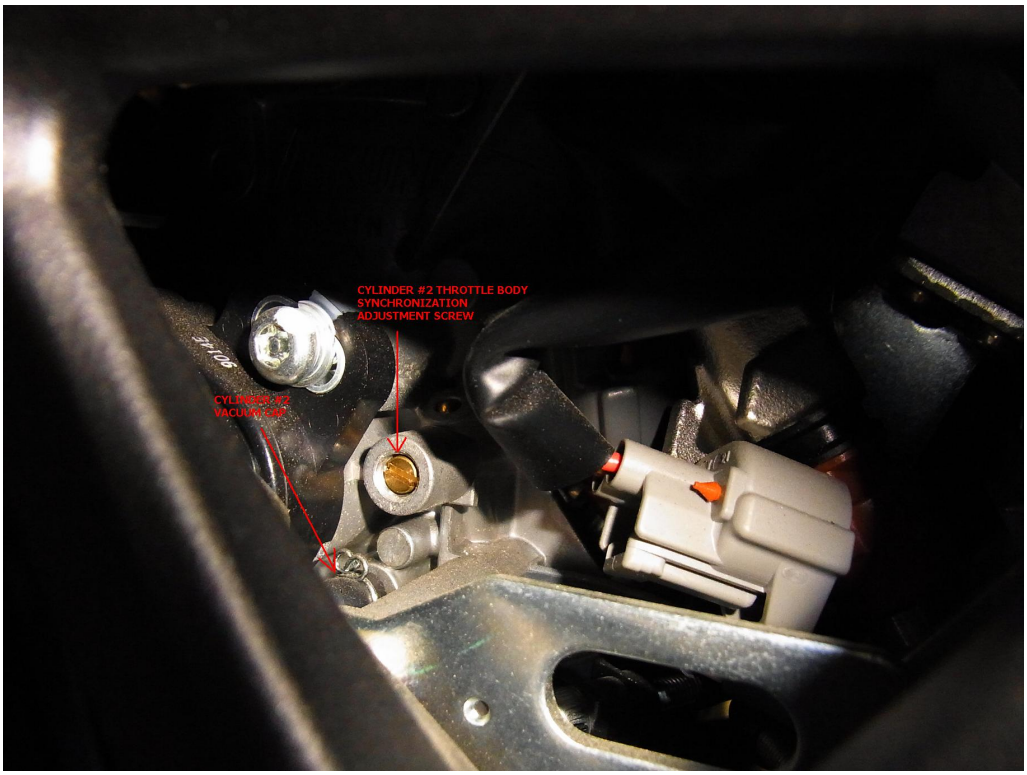

CYLINDER #2 (LEFT FRONT)

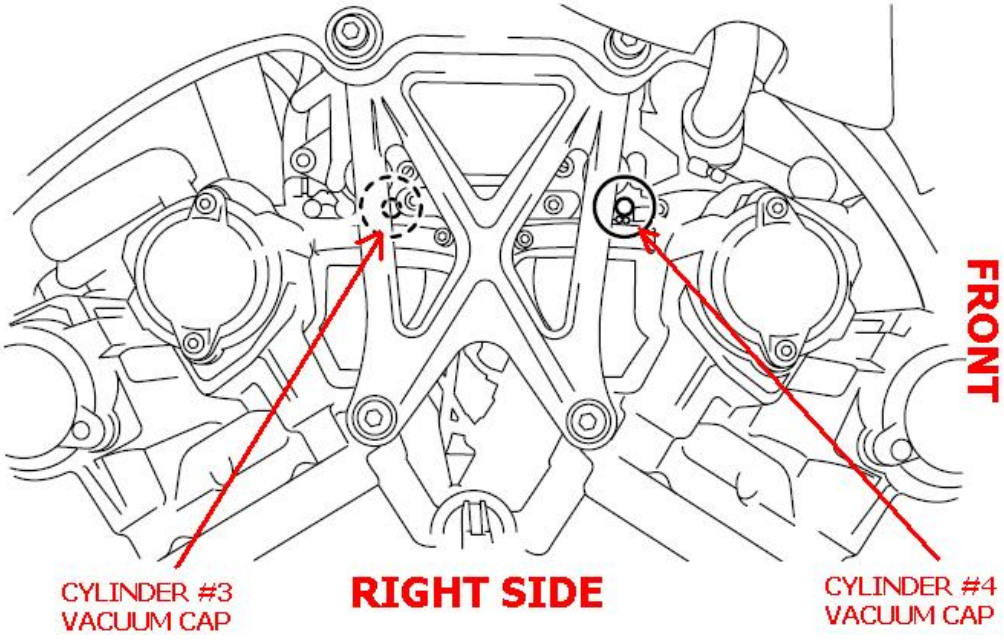

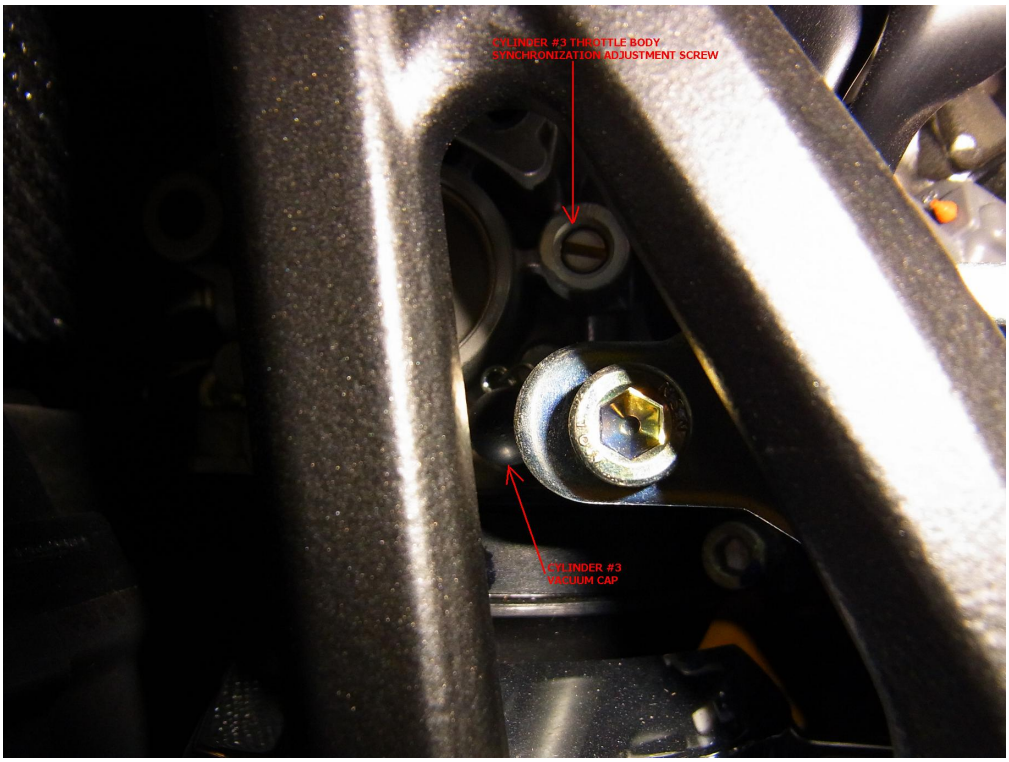

CYLINDER #3 (RIGHT REAR)

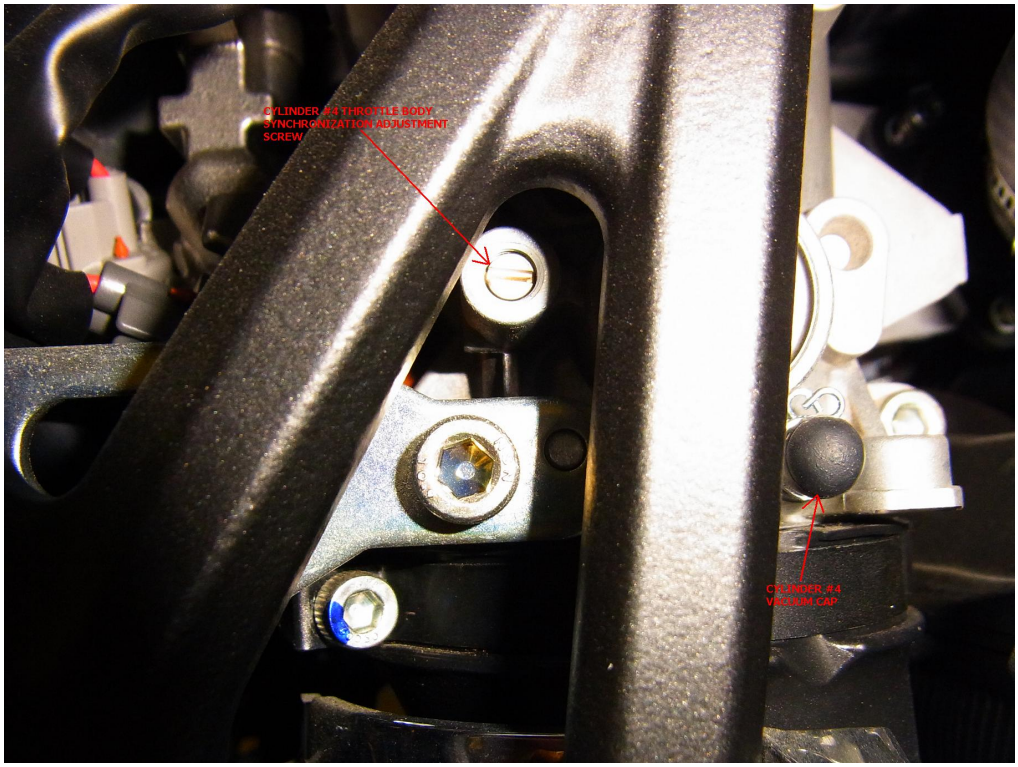

CYLINDER #4 (RIGHT FRONT)

Step-3:

Again, start up the bike in neutral and let it warm up sufficiently.

CAUTION: NEVER adjust the Standard Cylinder Throttle Body Adjustment Screw!!! It should always be kept where it was set at, at the factory and marked with the "white" paint on the screw.

If you are using cylinder #2 (Left Front) as your Standard cylinder, start with cylinder #1 (Left Rear) throttle body adjustment screw and adjust it to be the same level as cylinder#2. Then go to cylinder #3 (Right Rear) and adjust the tuner fluid to the same level as cylinders #1 and #2, then finally adjust cylinder #4 (Right Front) so that its fluid level is the same as cylinders #1, #2 and #3.

After each and every adjustment, rev up the engine with a slight twist of the throttle (there's no set RPM but 3-4K RPM is sufficient) and let the engine return to idle. Check your adjustments and see if the fluid levels at each step are as you adjusted them for. If not, you may have to do these steps a few times to get all four fluid levels to be the same level.

Now, if your standard cylinder is #4, then start your adjustment with cylinder #3, then #1 and finally #2.

Once you have all four cylinder fluid levels adjusted to the same level, stop the engine, turn OFF the bike, disconnect the four black hoses, reinstall all four vacuum "dead" caps, start the engine again and check that the bike's engine runs smoothly. You can verify this by rev'ing the engine, again to 3-4K RPM and as the RPMs are coming down towards idle, you should not see any skips, bumps, blips, etc. in the RPM and it should decrease smoothly down to idle. When the RPM goes slightly below the normal idle RPM and then rises slightly back to idle is NOT an indication that it is incorrect. However, it is the BEST when the RPMs decrease and stop at idle without any dip below idle.

When you first do this procedure, it may take a few times to get it right. But with practice, it will soon become an easy operation.

Once again;

CAUTION: NEVER adjust the Standard Cylinder Throttle Body Adjustment Screw!!! It should always be kept where it was set at, at the factory and marked with the "white" paint on the screw.

END of Procedure

Ride Safe